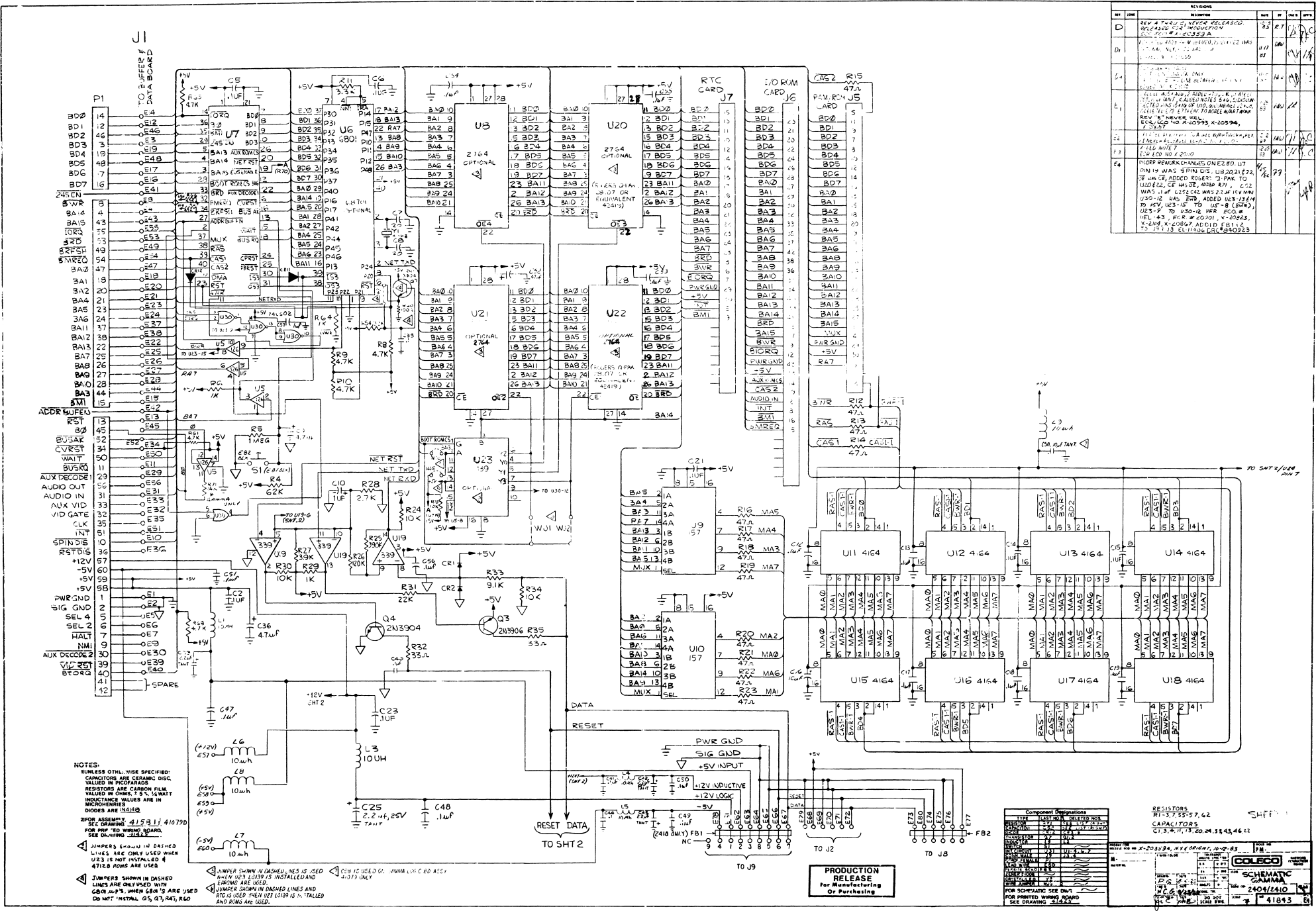

NOTES:

1. UNLESS OTHERWISE SPECIFIED:
   CAPACITORS ARE CERAMIC DISC, VALUED IN PICOFARADS
   RESISTORS ARE CARBON FILM, VALUED IN OHMS, ± 5%, ¼ WATT
   INDUCTANCE VALUES ARE IN MICROHENRIES
   DIODES ARE 1N4148
2. FOR ASSEMBLY, SEE DRAWING 41581 & 41079D
   FOR PRINTED WIRING BOARD, SEE DRAWING 41423
3. JUMPERS SHOWN IN DASHED LINES ARE ONLY USED WHEN U23 IS NOT INSTALLED & 47128 ROMS ARE USED
4. JUMPERS SHOWN IN DASHED LINES ARE ONLY USED WITH 6801 µP'S, WHEN 6801'S ARE USED DO NOT INSTALL Q5, Q7, R47, R60
5. JUMPER SHOWN IN DASHED LINES IS USED WHEN U23 LS139 IS INSTALLED AND EPROMS ARE USED.
6. JUMPER SHOWN IN DASHED LINES AND R70 IS USED WHEN U23 LS139 IS INSTALLED AND ROMS ARE USED.
7. C59 IS USED ON GAMMA LOGIC BD ASSY 41079 ONLY

PRODUCTION RELEASE
For Manufacturing Or Purchasing

REV.	ZONE	DESCRIPTION	DATE	BY	CHK'D	APP'D
D		REV A THRU C NEVER RELEASED. RELEASED FOR PRODUCTION ECO ECO # X-20359A	10-5-83	R.T.		
D1		[illegible]	11-17-83			
D2		[illegible]				
E1		[illegible] REV "E" NEVER REL. ECO ECO NO. X-20993, X-20594, X-20867				
E2		[illegible]				
E3		ECO ECO NO. X 20110	12-23-83			
E4		PILORP REWORK CHANGES ON E2 BD. U7 PIN 19 WAS SPIN DIS. U8, 20, 21 & 22, CE WAS CE, ADDED ROSER'S 2-PAK TO U20 & 22, CE WAS CE, ADDED R71, C52 WAS 1 µF, U25 & C42 WAS 2.2 µF 15V MIN U30-12 WAS BWR, ADDED U23-13 & 14 TO +5V, U23-15 TO U5-8 (BWR), U23-9 TO U30-12 PER ECO # 11EL-43, ECR # 20201, X-20823, X-2104, X-20867, ADDED FB1 & 2 TO J9 & J8 EL-11406 DRC # 840923	4/25/84	77		

Component Designations		
TYPE	LAST NO.	DELETED NOS.
RESISTOR	R71	SEE LIST (R-2-R-3)
CAPACITOR	C52	SEE LIST (R1-R2)
DIODE	CR12	CR3-5
TRANSISTOR	Q7	Q1-2
INDUCTOR	L9	L4
SWITCH	S1	
RECIRCUIT	U31	U1-4, 6, 7
CONN MALE	J9	J3, 4
CONN FEMALE	J7	
LED WIRE	LED	
STRAIN RECORDER		
CERAMIC CAPACITOR		
CRYSTALLIZER	Y2	
WIRE JUMPER	WJ2	

FOR SCHEMATIC SEE DWG
FOR PRINTED WIRING BOARD SEE DRAWING 41423

RESISTORS
R1-3, 7, 55-57, 62

CAPACITORS
C1, 3, 4, 11, 13, 20, 24, 33, 43, 46, 22

SHEET

PRODUCTION RELEASE X-20359A, N.Y. & ORIENT, 10-12-83

COLECO

SCHEMATIC GAMMA

2404/2410

41843